LG240643-LY 240 x 64 dots + yellow green led backlight

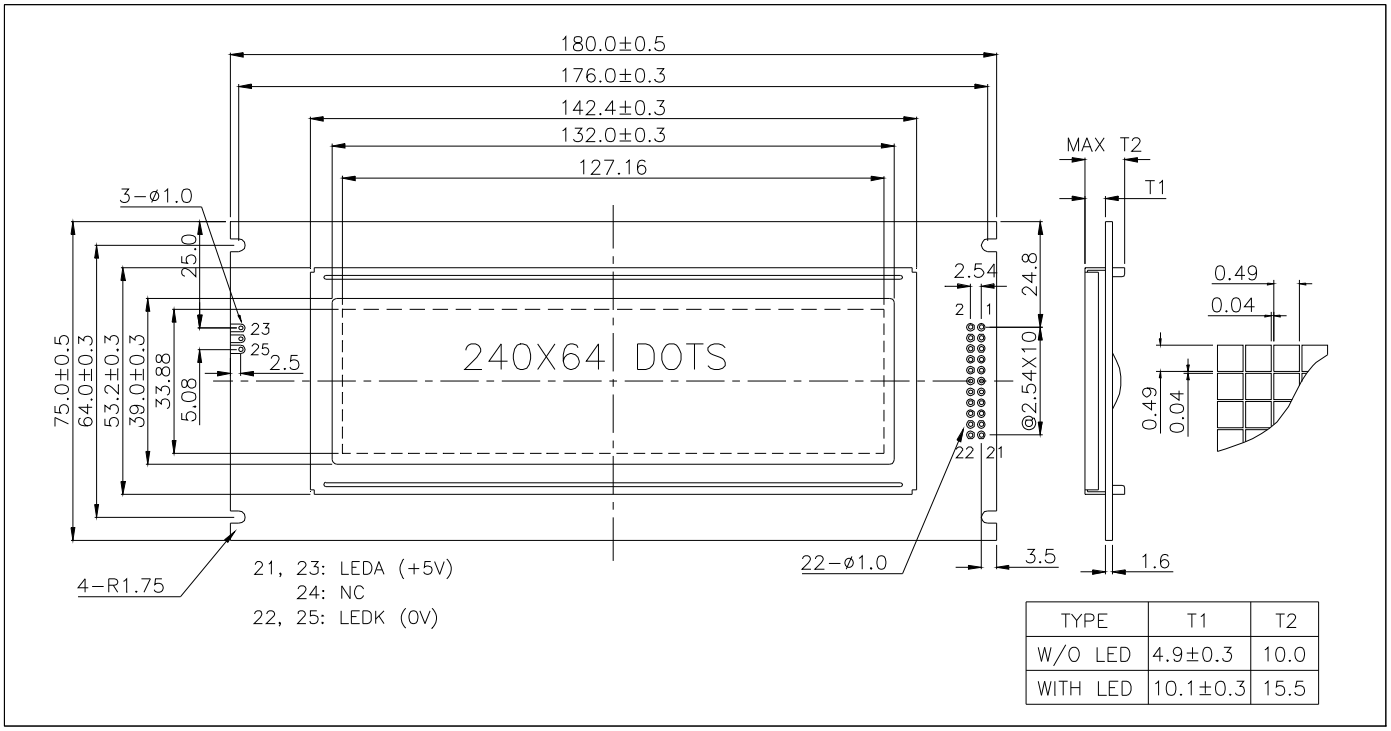

TYPE	T1	T2
W/O LED	4.9±0.3	10.0
WITH LED	10.1±0.3	15.5

ABSOLUTE MAXIMUM RATINGS

Item	Symbol	Min.	Max.	Unit
Supply Voltage(Logic)	V_{DD} - V_{SS}	-0.3	7.0	V
Supply Voltage(LCD)	V_{DD} - V_O	-0.3	15.0	V
Input Voltage	V_I	-0.3	V_{DD} + 0.3	V
Operating Temp.	T_{opr}	-20	70	°C
Storage Temp.	T_{stg}	-30	80	°C

MECHANICAL DATA

Item	Nominal Dimensions	Unit
Module Size (W x H x T)	180.0 x 75.0 x 10.0/15.5	mm
Viewing Area (W x H)	132.0 x 39.0	mm
Dot Pitch (W x H)	0.53 x 0.53	mm
Dot Size (W x H)	0.49 x 0.49	mm
Weight (Reflective/LED)	Approx. 110/150	g

ELECTRICAL CHARACTERISTICS (V_{DD}=5V±0.25V)

Item	Symbol	Test Condition	Min.	Typ.	Max.	Unit
Input High Voltage	V_{IH}	--	2.0	--	V_{DD}	V
Input Low Voltage	V_{IL}	--	- 0.3	--	0.8	V
Output High Voltage	V_{OH}	I_{OH} = - 0.2mA	2.4	--	V_{DD}	V
Output Low Voltage	V_{OL}	I_{OL} = 1.6mA	0	--	0.4	V
Supply Current	I_{DD}	V_{DD} = 5.0V	--	8.0	10.0	mA
LCD Driving Voltage	V_{DD} - V_O	Ta=25°C	--	12.7	--	V

PIN CONNECTIONS

Pin	Symbol	Level	Function
1	V_{SS}	0V	GND
2	V_{DD}	+5V	Power supply for logic
3	V_O	--	Operating voltage for LCD
4	RS	H/L	H : Data L : Instruction code
5	R/W	H/L	H : Read L : Write
6	E	H,H→L	Enable signal
7	/RST	L	Reset signal, active "L"
8	DB0	H/L	Data bus line
9	DB1	H/L	
10	DB2	H/L	
11	DB3	H/L	
12	DB4	H/L	
13	DB5	H/L	
14	DB6	H/L	
15	DB7	H/L	
16	CS1	H	Chip selection for IC1, active "H"
17	CS2	H	Chip selection for IC2, active "H"
18	CS3	H	Chip selection for IC3, active "H"
19	CS4	H	Chip selection for IC4, active "H"
20	V_{OUT}	-10V	Output voltage for LCD driving

BLOCK DIAGRAM

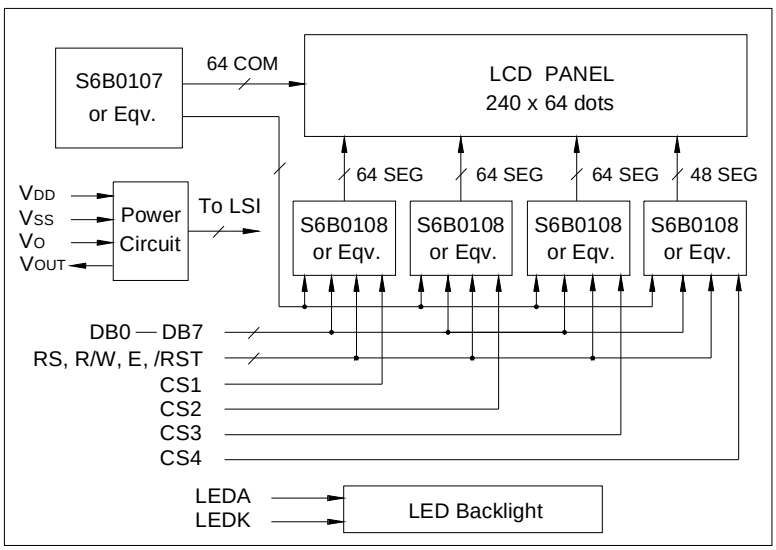

LED BACKLIGHT SPECIFICATIONS (Ta=25°C)

Item	Symbol	Typ.	Max.	Unit
Forward Voltage	V_f	4.1	4.3	V
Forward Current	I_f	550	--	mA
Emission Wave Length	λ_p	568	--	nm