LG240641-DW 240 x 64 dots + white led backlight

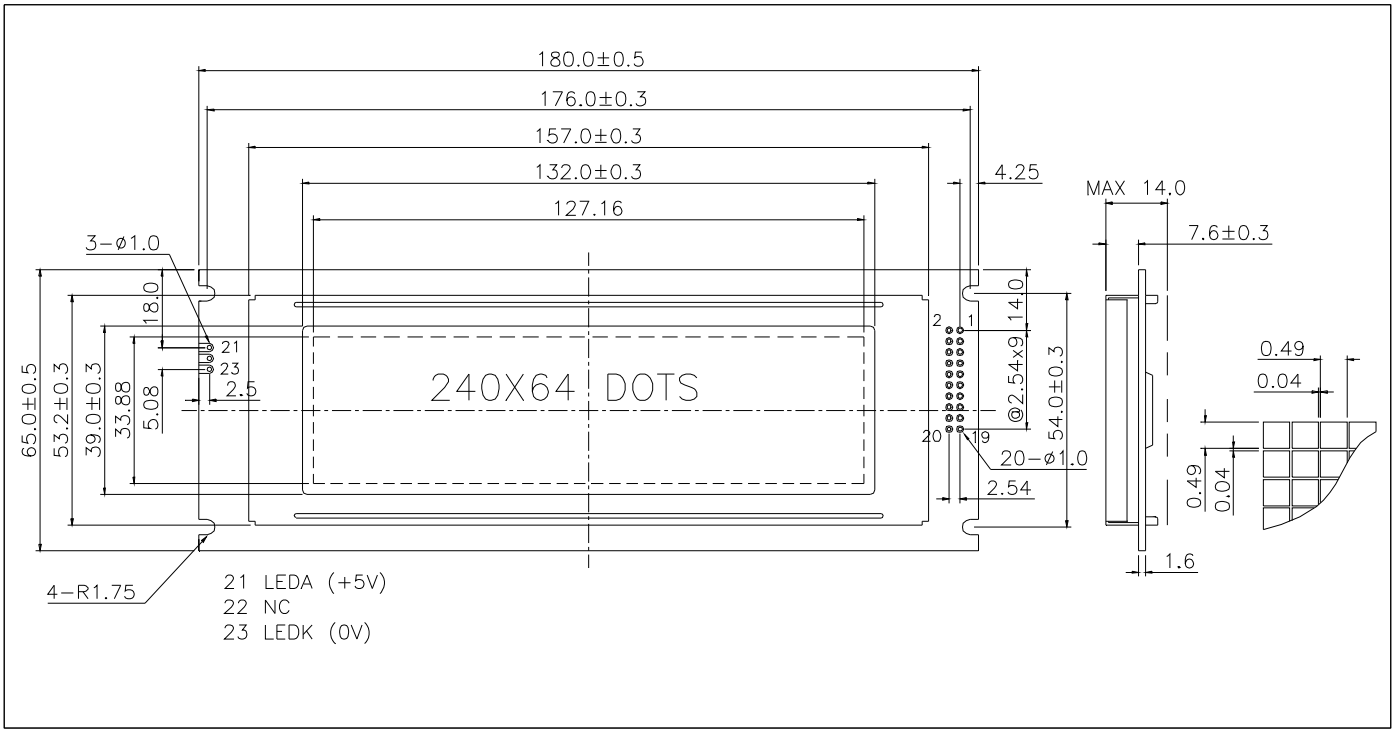

ABSOLUTE MAXIMUM RATINGS

Item	Symbol	Min.	Max.	Unit
Supply Voltage(Logic)	V_{DD}- V_{SS}	-0.3	7.0	V
Supply Voltage(LCD)	V_{DD}- V_O	-0.3	25.0	V
Input Voltage	V_I	-0.3	V_{DD}+ 0.3	V
Operating Temp.	T_{opr}	-20	70	°C
Storage Temp.	T_{stg}	-30	80	°C

MECHANICAL DATA

Item	Nominal Dimensions	Unit
Module Size (W x H x T)	180.0 x 65.0 x 14.0	mm
Viewing Area (W x H)	132.0 x 39.0	mm
Dot Pitch (W x H)	0.53 x 0.53	mm
Dot Size (W x H)	0.49 x 0.49	mm
Weight	Approx. 150	g

ELECTRICAL CHARACTERISTICS (V_{DD}=5V±0.25V)

Item	Symbol	Test Condition	Min.	Typ.	Max.	Unit
Input High Voltage	V_{IH}	--	V_{DD}-2.2	--	V_{DD}	V
Input Low Voltage	V_{IL}	--	- 0.3	--	0.8	V
Output High Voltage	V_{OH}	--	V_{DD}-0.3	--	V_{DD}	V
Output Low Voltage	V_{OL}	--	0	--	0.3	V
Supply Current	I_{DD}	V_{DD} = 5.0V	--	16.0	20.0	mA
LCD Driving Voltage	V_{DD} - V_O	Ta=25°C	--	12.7	--	V

PIN CONNECTIONS

Pin	Symbol	Level	Function
1	FG	--	Frame ground
2	V_{SS}	0V	GND
3	V_{DD}	+5V	Power supply for logic
4	V_O	--	Operating voltage for LCD
5	/WR	L	Write signal, active "L"
6	/RD	L	Read signal, active "L"
7	/CE	L	Chip enable singal, active "L"
8	C/$\overline{D}$	H/L	L : Data H : Instruction code
9	NC	--	No connection
10	/RST	L	Reset signal, active "L"
11	DB0	H/L	Data bus line
12	DB1	H/L	
13	DB2	H/L	
14	DB3	H/L	
15	DB4	H/L	
16	DB5	H/L	
17	DB6	H/L	
18	DB7	H/L	
19	FS	H/L	Font selection L: 8x8, H: 6x8
20	V_{OUT}	-10V	Output voltage for LCD driving

BLOCK DIAGRAM

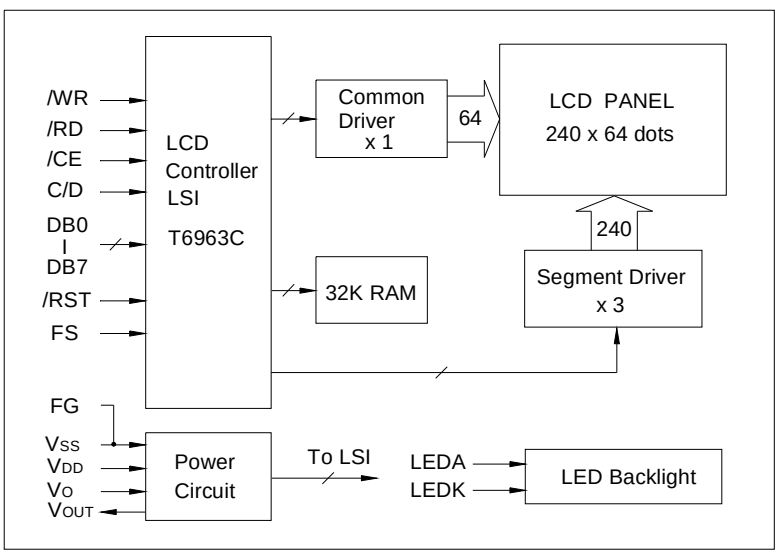

LED BACKLIGHT SPECIFICATIONS (Ta=25°C)

Item	Symbol	Typ.	Max.	Unit
Forward Voltage	V_f	3.1	3.3	V
Forward Current	I_f	120	--	mA
LED Color		White		